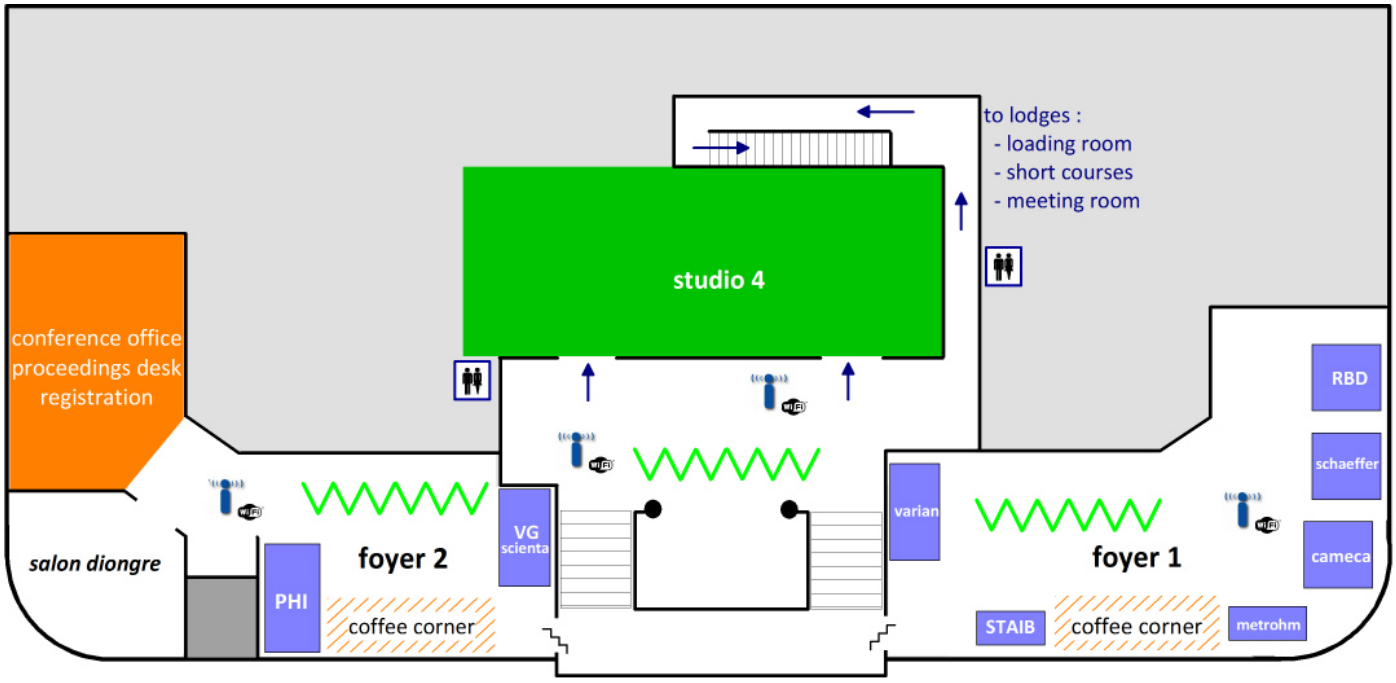

second floor

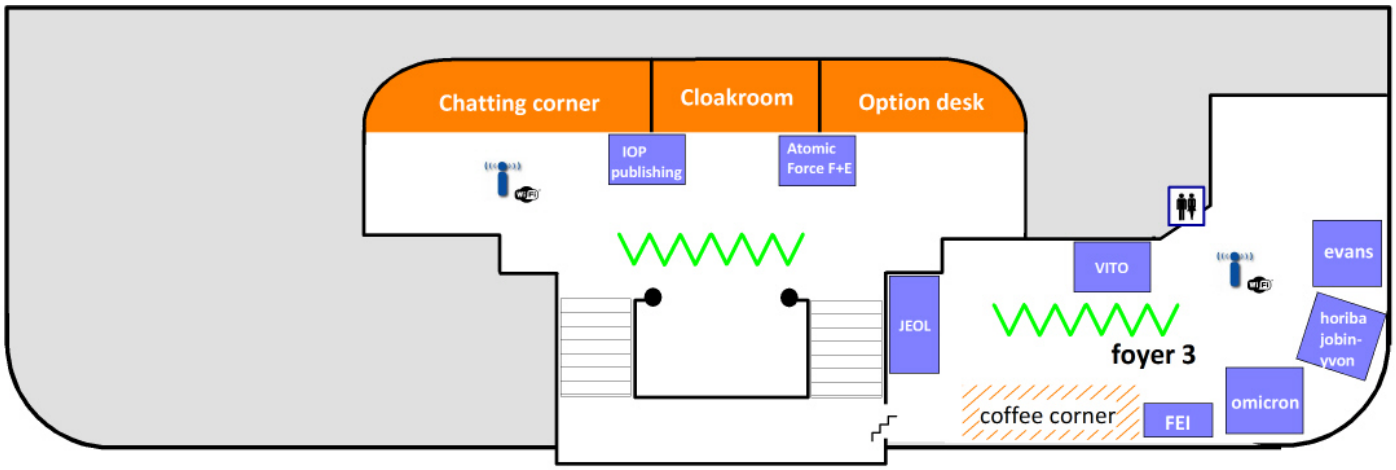

first floor

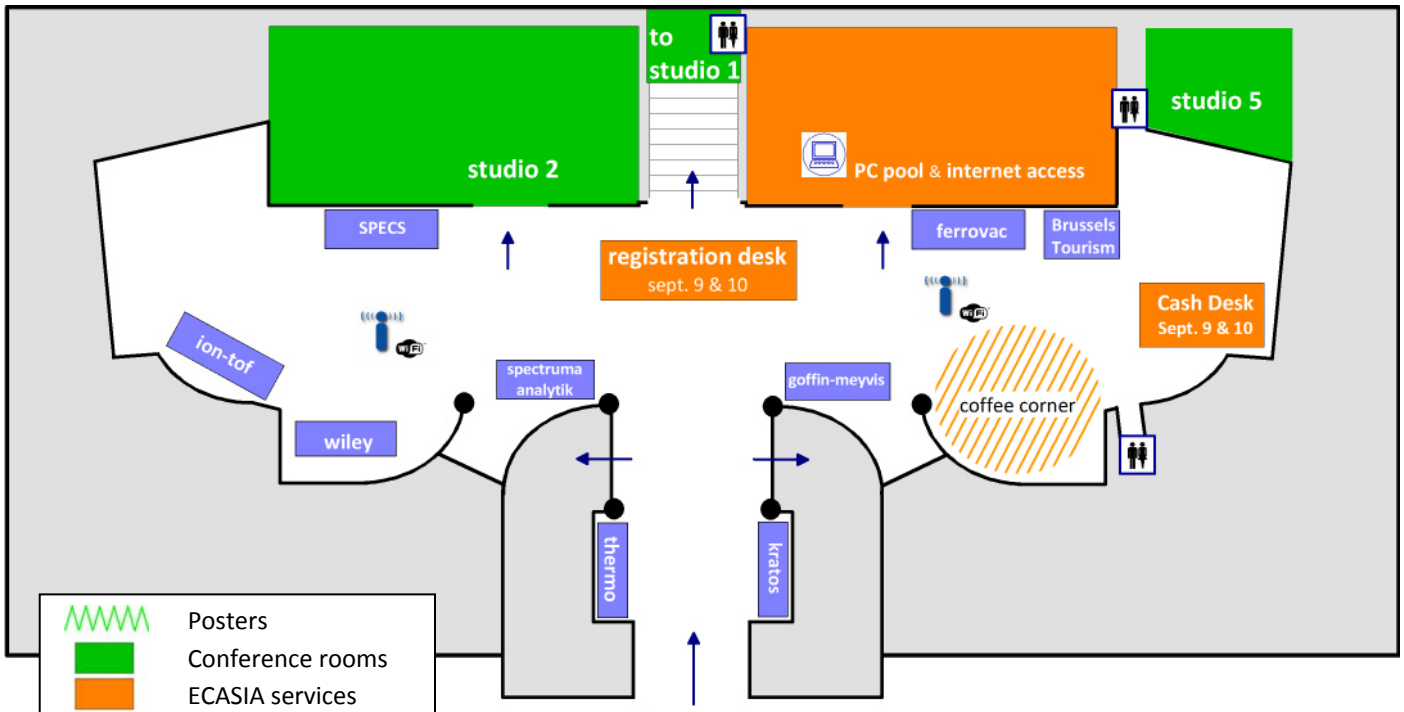

main entrance

Place Sainte Croix